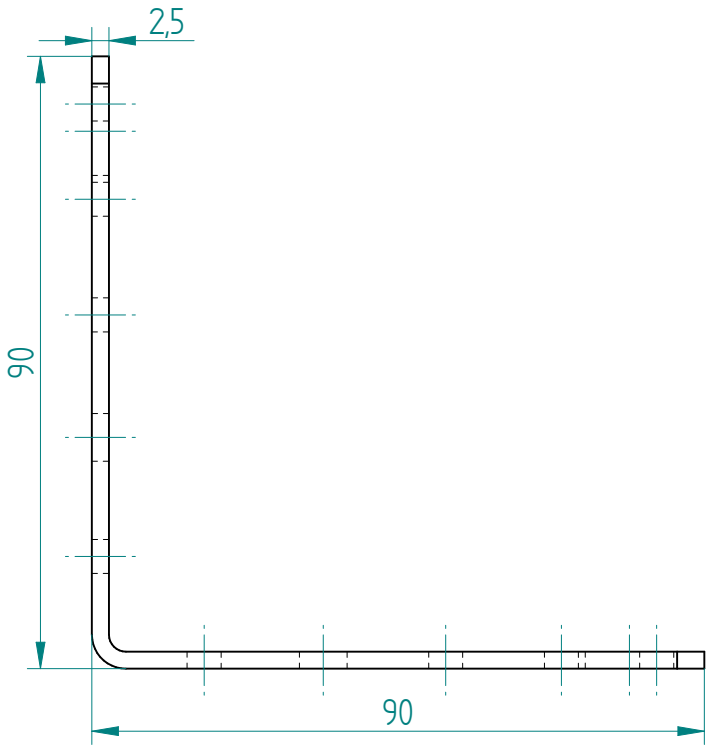

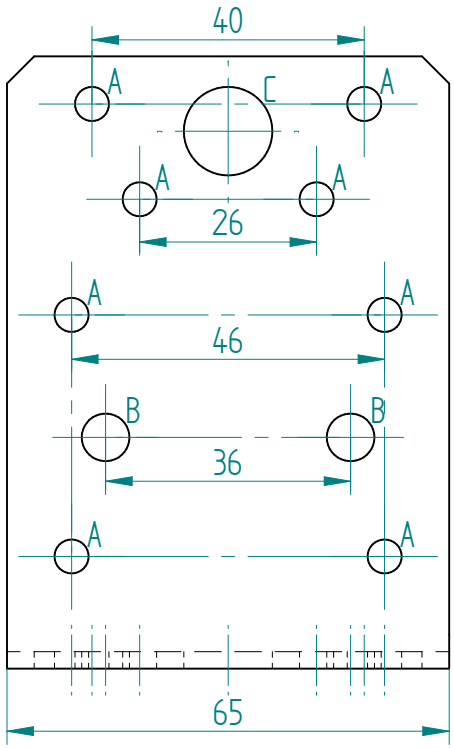

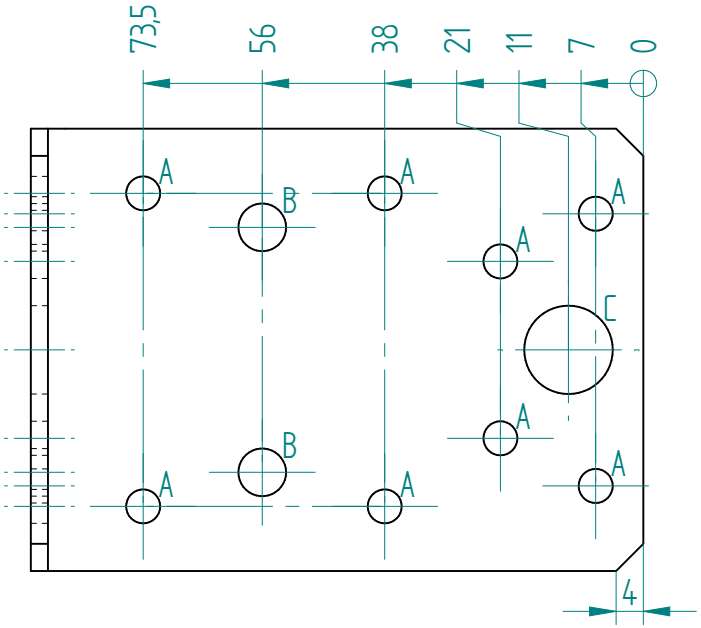

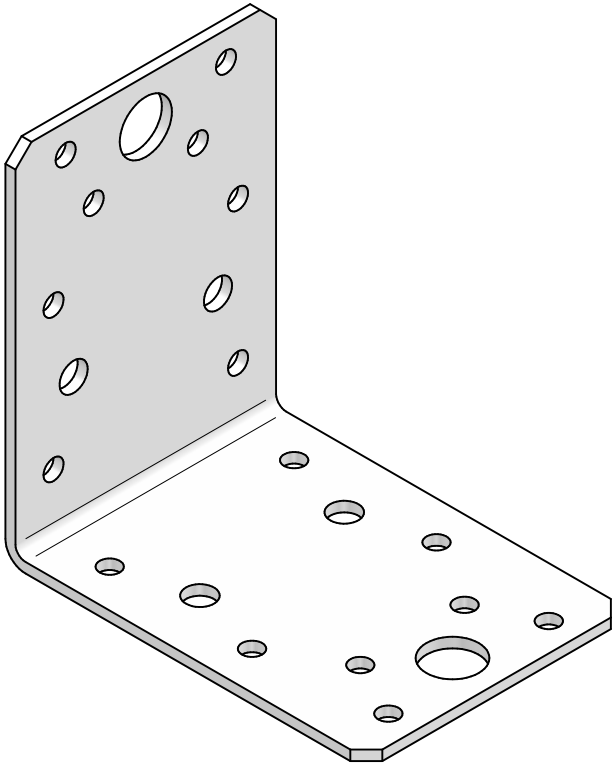

3.2

Hole	Size	Count
A	5 mm	16
B	7 mm	4
C	13 mm	2

Product name: Angle bracket 90x90x65x2,5

Material: A4 AISI316